MBP®
SPRAY EQUIPMENT

INSTRUCTIONS AND PARTS LIST

SERIES TEL 8-2K (5:1) MIXING PUMP

Instructions and Parts List

INDEX

Typical installation 1

Warnings 1

Pressure relief procedure 2

Operating instructions 2

Cleaning 3

Parts drawing & list 5

Troubleshooting guide 12

MBP S.L. • C/. Anboto, 17 • Poligono ANSOLETA • Phone: (34) 945-132744 • 01006 VITORIA (Alava) / SPAIN

TYPICAL INSTALLATION

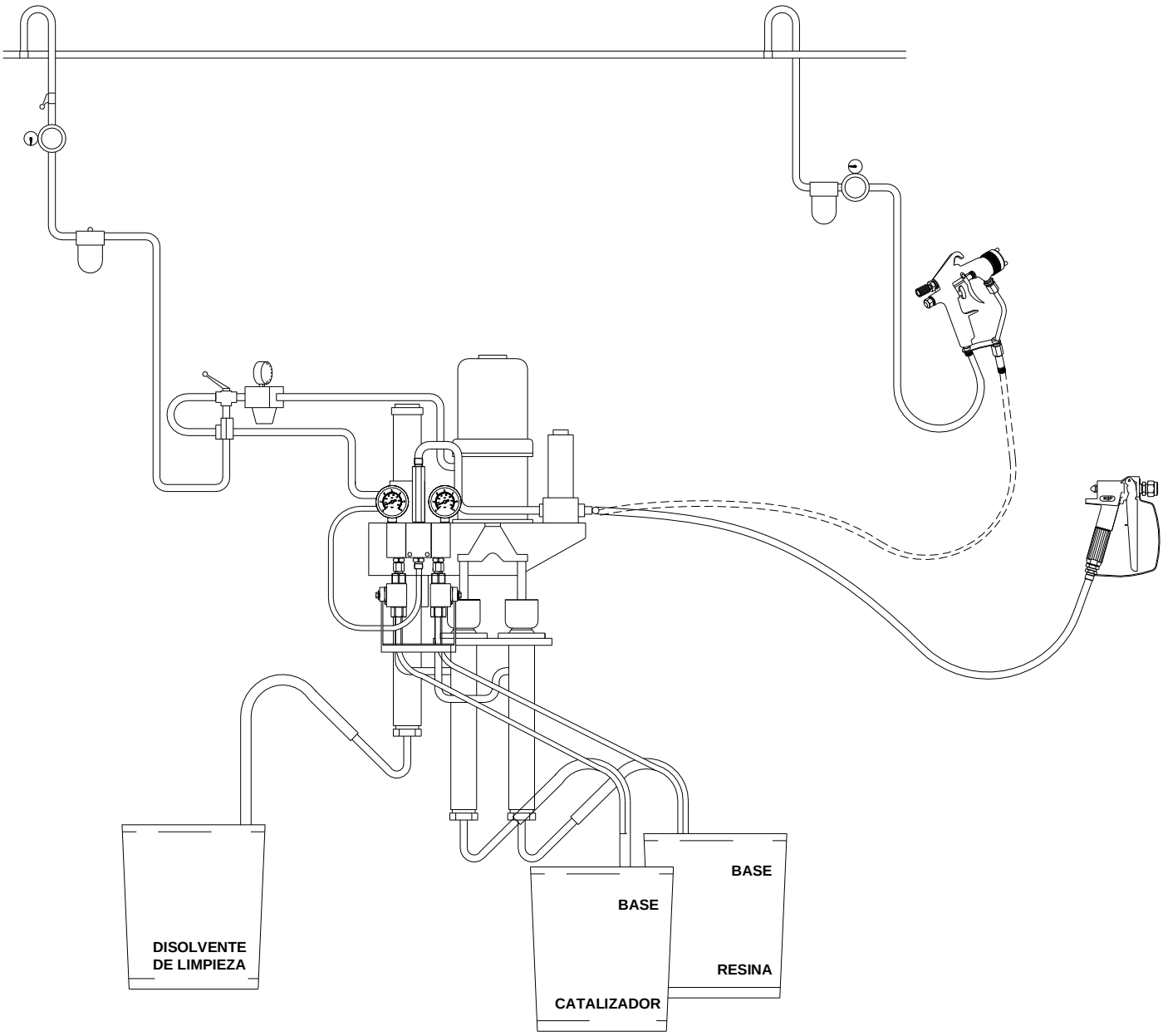

WARNING

ATTENTION!! Read and understand all instructions carefully before operating equipment.

INJECTION HAZARD

This equipment generates very high fluid pressure. Spray from the gun, leaks or ruptured components can inject fluid through your skin and into your body and cause extremely serious bodily injury.

The spray gun should never be handled carelessly, nor spray directed toward any part of the body. Never put hand or fingers over the spray tip.

Be sure equipment safety devices are operating properly before each use.

If any fluid appears to penetrate your skin, get emergency medical care at once. Do not treat as a simple cut. Tell the doctor exactly what fluid was injected.

FIRE HAZARD

Static electricity is created by the high velocity flow of fluid through the pump and hose. If every part of spray equipment is not properly grounded, sparking may occur, and the system may become hazardous. Check the entire system for positive grounding.

GROUNDING

Before starting to work the pump must be connected to ground:

1.- The pump must be connected to ground with a ground wire which is supplied with the pump (4 mm^2 of section and a clamp).

2.- SPRAY GUN: Obtain grounding through connection to a properly grounded fluid hose and pump.

3.- OBJECT BEING SPRAYED: Use ground wire and clamp.

4.- AIR COMPRESOR: Follow air compressor manufacturer's recommendations.

5.- Use **ONLY METAL PAILS**, which are conductive. Do not place the pail on a non-conductive surface, such as paper or cardboard, which interrupts the grounding continuity.

PRESSURE RELIEF PROCEDURE

1.- Engage the gun safety latch.

2.- Turn off the air to the pump.

3.- Close the air inlet valve.

4.- Disengage the gun safety latch.

5.- Hold a metal part of the gun firmily to the side of a grounded metal pail, and trigger the gun safety latch.

6.- Engage the gun safety latch.

7.- Open the drain valves (fig.1 and fig.3), having a grounded metal container ready to catch the drainage.

8.- Leave the drain valves open until you are ready to spray again.

OPERATING INSTRUCTIONS

Follow all instructions above, be sure that fittings at pump outlet and at gun are tight. Use two wrench to tighten the maing fitting.

Fill the packing nut with oil to help prolong the packing life.

• Turn on the air to the pump (fig.1), but the position of this valve must to be ''close air''.

• Check that the A, B and C valves are in position ''1'' before open the air valve.

• Put the suction pipes into the respective containers:

‘’C’’ to base product (varnish)
‘’B’’ to catalyst

• Open the air inlet valve (fig.1) and turn on the air regulator until the pump begins to cycle. Allow the pump to cycle slowly until all air is purged from the fluid lines. The lines are purged when the fluids emitted from the drain valves ‘’B’’ and ‘’C’’ is flowing in a steady stream.

•Simultaneously turn off the drain valves ‘’B’’ and ‘’C’’ to the position ‘’2’’ (fig.3).

•The pump is ready.

CLEANING

• Turn off the air inlet valve (fig.1).

• Remove the spray tip and trigger gun to relieve pressure.

• Set the drain valves ‘’B’’ and ‘’C’’ in the position ‘’Working / Varnishing’’ (UP) fig.3.

• Set the air inlet valve ‘’A’’(fig.2) in position nº2. Now, the cleaning pump will start to pumpìng solvent.

• Trigger the gun until the solvent runs clear.

When the pump stay a long time without working, is necessary to circulate solvent throuugh the three suction pipes.

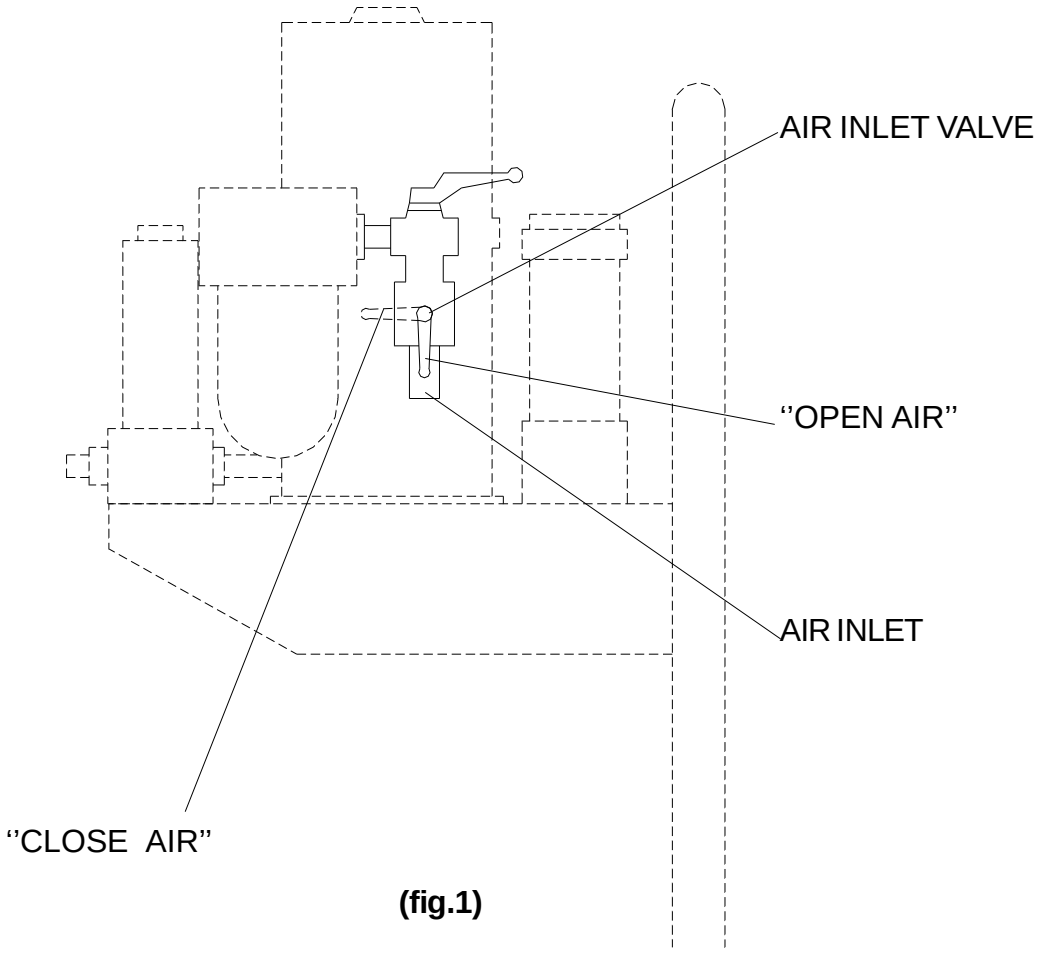

(fig.1)

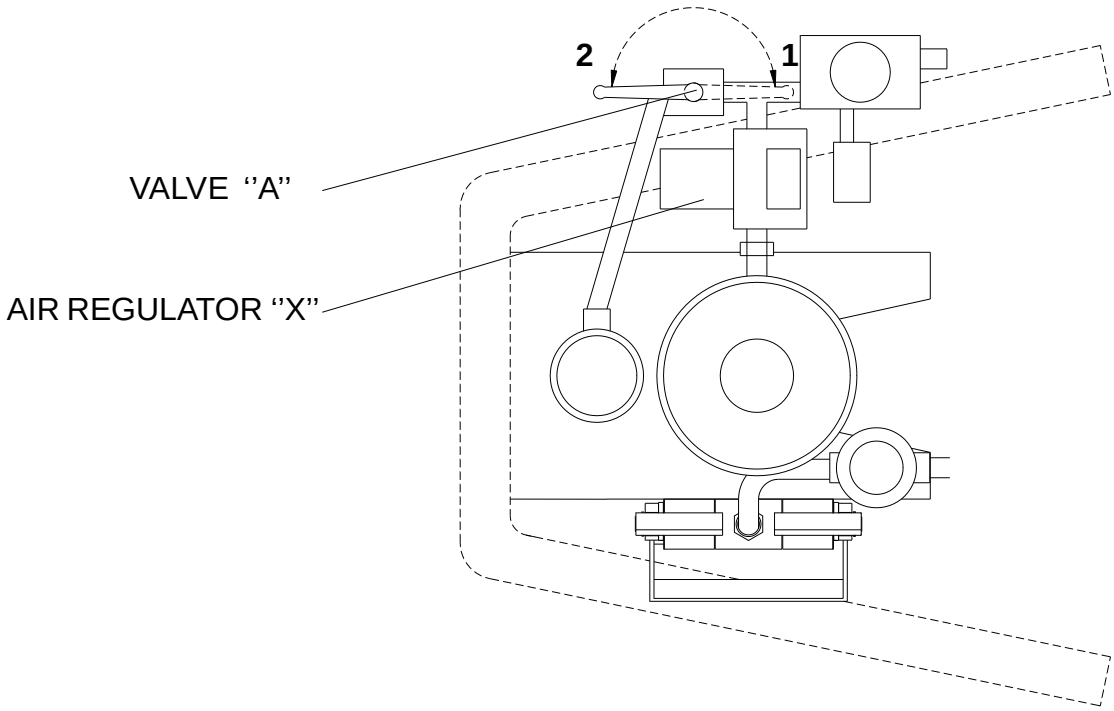
2
1
VALVE ''A''
AIR REGULATOR ''X''

(fig.2)

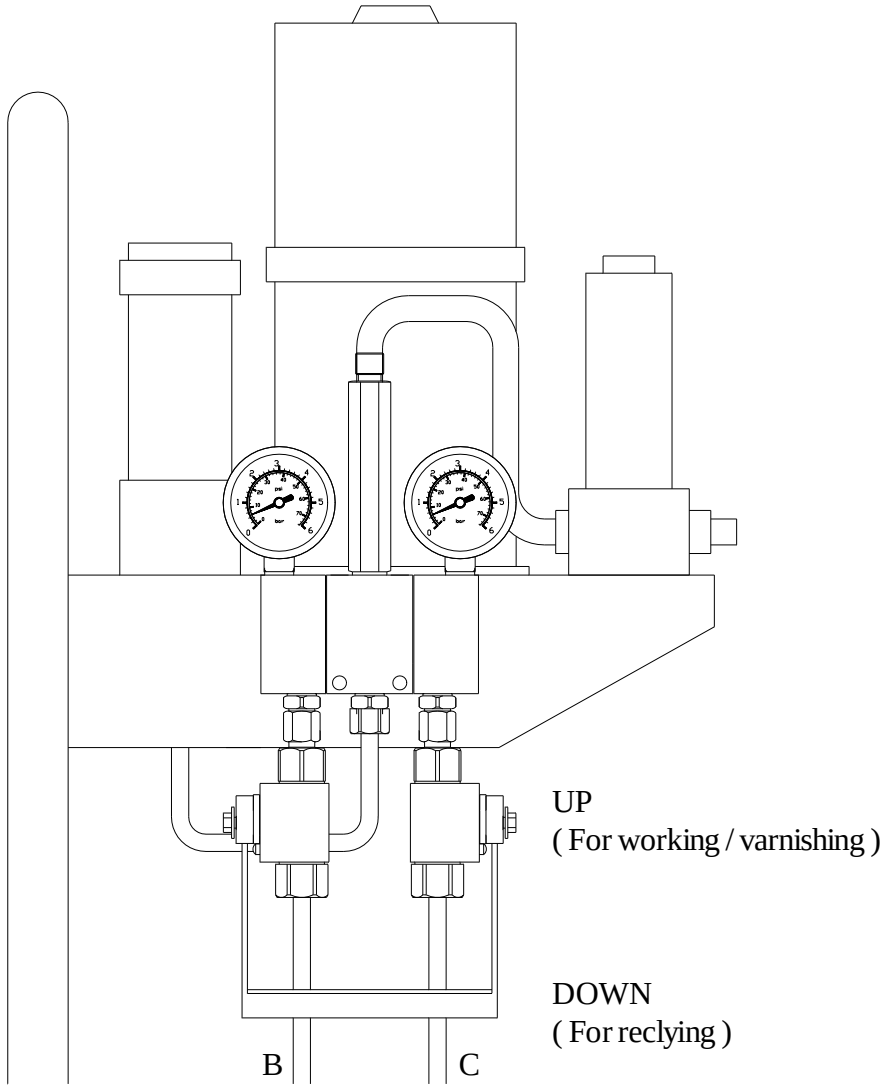
UP
(For working / varnishing)
DOWN
(For reclying)
B
C

(fig. 3)

AIR MOTOR

16A.200.00

Nº	REF.	DESCRIPCION	Q
1	A.110.02	CAP	1
2	C.JT0.01	JOINT	1
3	A.210.01	CYLINDER	1
4	A.120.04	ROD	2
5	A.220.07	SUPPORT	1
6	A.120.08	YOKE	1
7	A.221.00	ROD	1
8	C.TJ0.02	SCREW	2
9	A.240.02	CLIP	2
10	A.240.01	PISTON	1
***11**	A.122.00	STEM	2
***12**	C.JT0.05	JOINT	1
13	A.220.11	ROD	1
***14**	C.JT0.07	JOINT	1
15	CB2.015	SLEEVE	1
***16**	C.JT0.06	JOINT	1
17	A.130.02	PLATE	2
18	A.250.01	BASE	1
19	C.TA0.01	SCREW	6
20	C.TC0.01	SCREW	16
21	A.120.01	ROCKER	2
22	A.120.02	SPRING	2
23	A.120.03	ROD	2
***24**	A.120.05	CLIP	2
25	A.120.06	NUT	4
26	A.150.02	JOINT	1
***27**	A.120.10	JOINT	2
***28**	A.220.09	JOINT	2
29	CAR 125	RETAINER	1
30	TIE.GR	GROUND	1

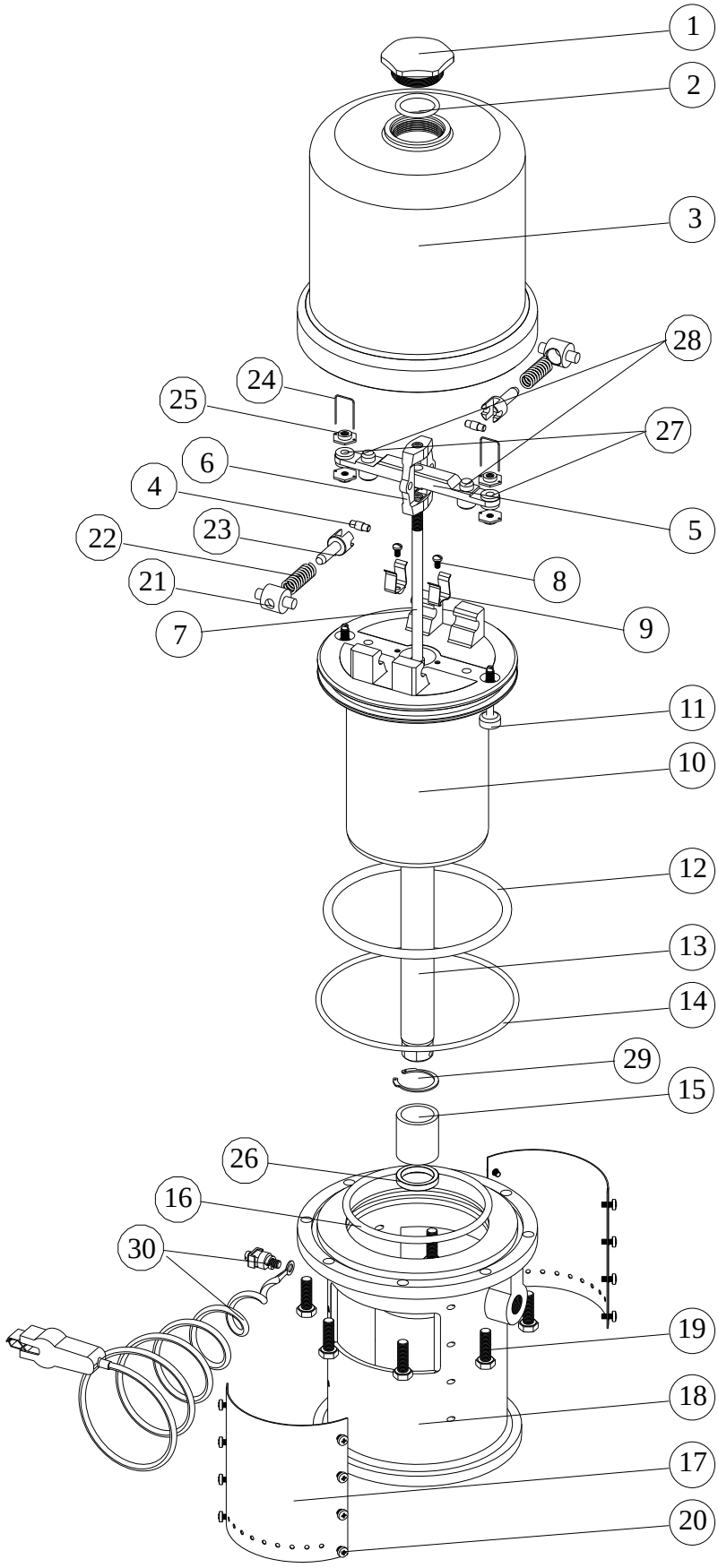

(fig. 4)

* **Included in KIT.054**

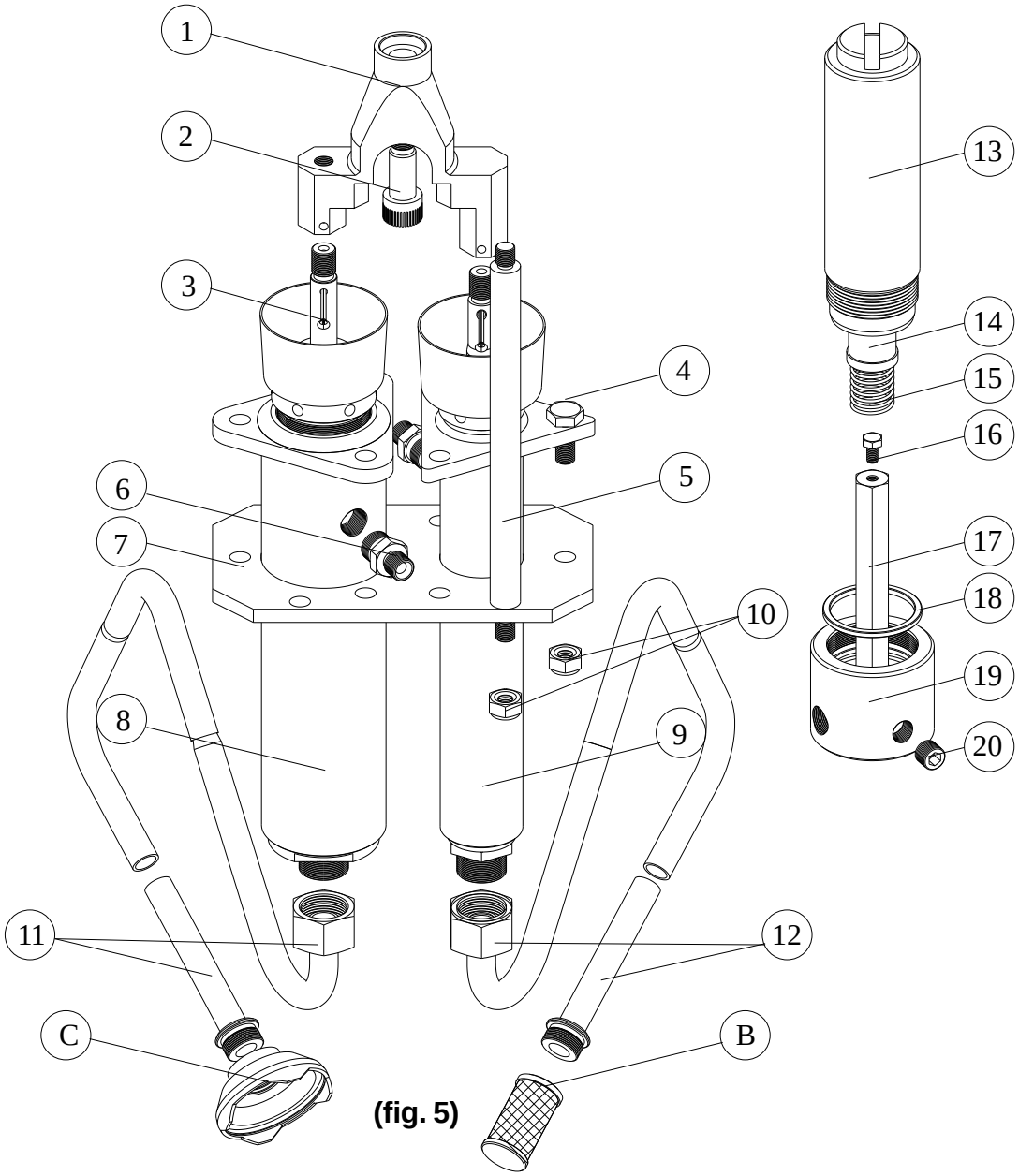

(fig. 5)

DISPLACEMENT PUMP ASSEMBLAGE FOR TEL 8-2K 5:1

Nº	REF.	DESCRIPTION	Q
1	17.200.02	UNION	1
2	16.000.04	SCREW	1
3	CPA.101	PIN	2
4	CTA.005	SCREW	6
5	17.200.01	TIE	4
6	16.000.07	COUPLING	2
7	17.200.03	SUPPORT	1
8	29B.200.00	PUMP A	1
9	18B.100.00	PUMP B	1
10	CTU.101	NUT	10
11	D.100.00	SUCTION	2

Nº	REF.	DESCRIPTION	Q
12	16.300.00	SUCTION	1
B	16.313.00	FILTER	1
C	D.130.00	FILTER	1
13	G.100.02	COVER	1
14	G.100.05	FILTER (*)	1
15	G.100.04	SPRING	1
16	CTA.901	SCREW	1
17	G.100.03	SUPPORT	1
18	G.100.07	JOINT	1
19	16.700.01	BODY	1
20	CTF.001	PLUG	2

(*) FILTER 100 Mesh - Ref. G.100.05
FILTER 60 Mesh - Ref. G.100.20
FILTER 200 Mesh - Ref. G.100.21

PUMP A (PAINT)

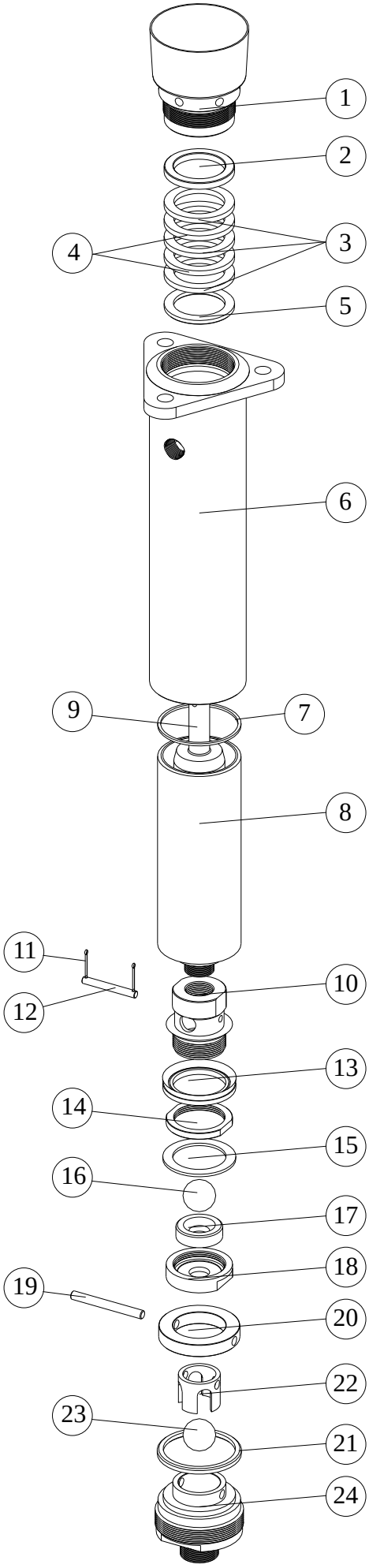

(fig. 6)

29B.200.00

Nº	REF.	DESCRIPCION	Q
1	B.220.00	PACKING NUT	1
***2**	B.230.01	FEMALE GLAND	1
***3**	B.230.02PA	PACKING	3
***4**	B.230.02T	PACKING	2
***5**	B.230.03	MALE GLAND	1
6	B.210.00	HOUSING	1
7	B.200.01	JOINT	1
8	B.200.02	SLEEVE	1
9	B.200.03	ROD	1
10	B.240.01	PISTON	1
11	CPA.102	PIN	2
12	B.240.05	PIN	1
***13**	B.240.02	PACKING	1
14	B.240.04	NUT	1
15	B.240.03	SCRAPER	1
16	CBO.103	BALL	1
17	B.240.06	SEAT	1
18	B.240.07	NUT	1
19	B.260.03	PIN	1
20	B.260.02	RETAINER	1
21	B.260.04	JOINT	1
22	B.260.05	GUIDE	1
23	CBO.103	BALL	1
24	B.260.01	VALVE	1

* **Included in KIT.044**

NOTE: Fix parts 9, 10, 14 and 18 with loctite 542 or similar (wait 1 hour before start running the unit)

PUMP B (CATALYST)

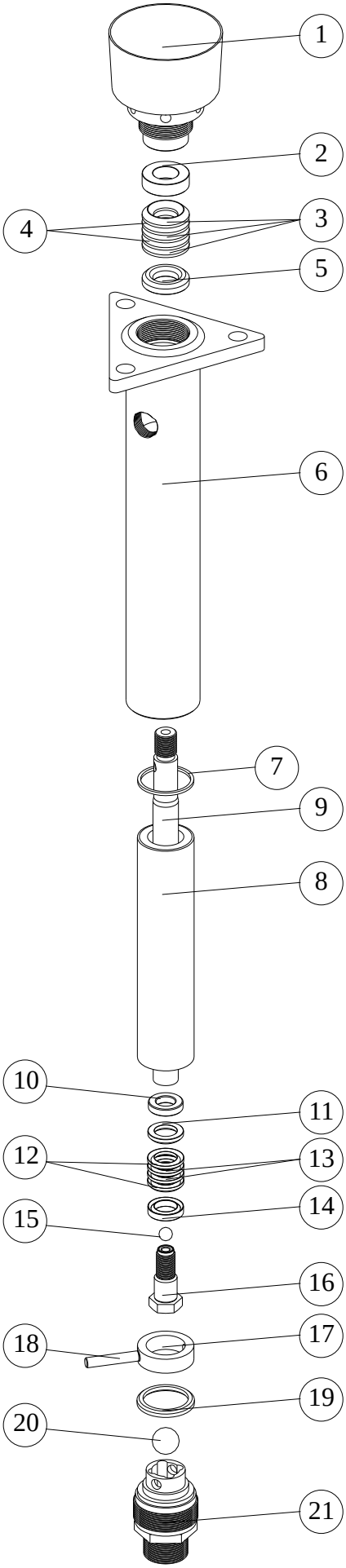

(fig. 7)

18B.100.00

Nº	REF.	DESCRIPTION	Q
1	B.120.00	PACKING NUT	1
***2**	B.131.01	FEMALE GLAND	1
***3**	B.131.02 PA	PACKING	3
***4**	B.131.02 T	PACKING	2
***5**	B.131.03	MALE GLAND	1
6	B.110.00	HOUSING	1
7	B.100.01	JOINT	1
8	B.100.12	SLEEVE	1
9	B.100.13	ROD	1
10	B.141.01	WASHER	1
***11**	B.141.02	MALE GLAND	1
***12**	B.141.03 PA	PACKING	2
***13**	B.141.03 T	PACKING	2
***14**	B.141.04	FEMALE GLAND	1
15	CBO.202	BALL	1
16	B.151.00	PISTON	1
17	B.170.01	RETAINER	1
18	B.100.05	PIN	1
19	B.100.06	JOINT	1
20	CBO.209	BALL	1
21	B.171.00	VALVE	1

*** Included in KIT.015**

NOTE: Fix parts 9 and 16 with loctite 542 or similar (wait 1 hour before start running the unit).

MIXER (16.120.00)

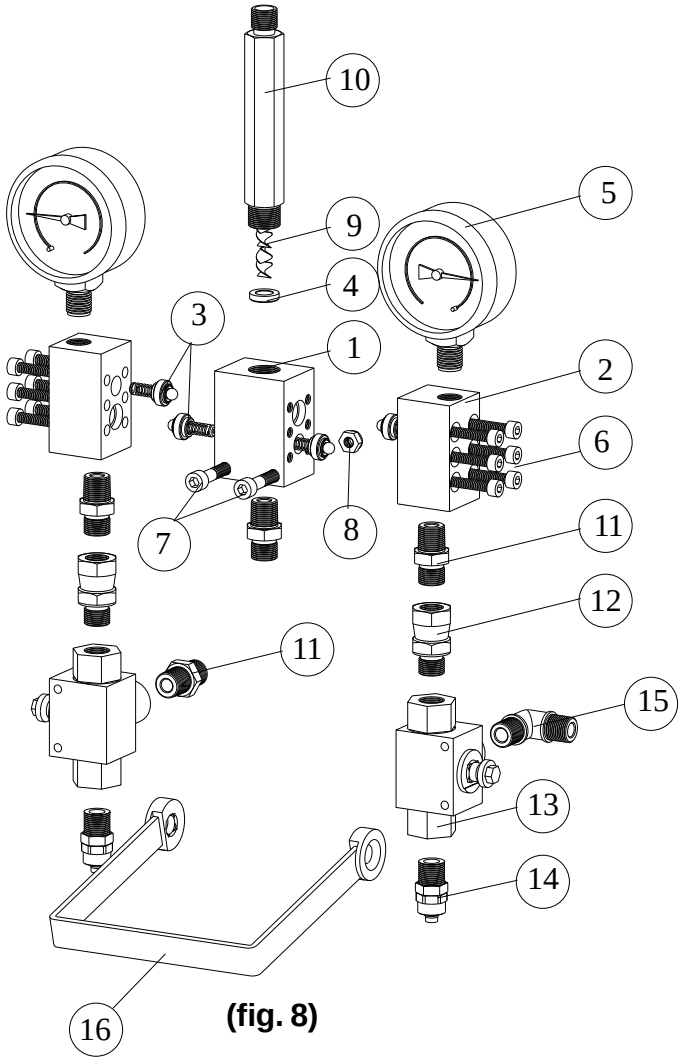

(fig. 8)

Nº	REF.	DESCRIPTION	Q
1	16.120.01	BODY	1
2	16.120.02	BODY	2
3	16.121.00	VALVE	4
4	16.120.03	SEAT	1
5	*CNB.XXX	GAUGE	2
6	CTB.017	SCREW	12
7	CTB.007	SCREW	2
8	CTU.105	NUT	2
9	16.100.07	MIXER	1
10	16.100.05	MIXER BODY	1
11	G.100.06	COUPLING	4
12	CNA.116	SWIVEL	2
13	CNC.006	VALVE	2
14	CNA.057	COUPLING	2
15	CNA.063	ELBOW	1
16	16.122.00	HANDLE	1

*CNB.XXX	CNB.014	0-60
	CNB.016	0-100
	CNB.017	0-160
	CNB.005	0-250

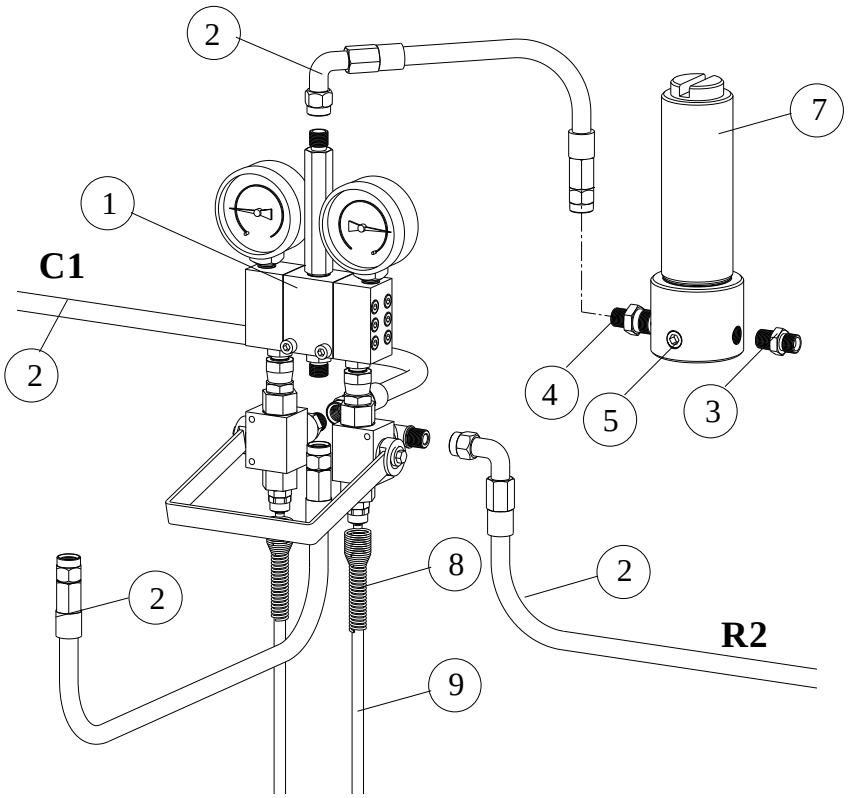

(fig. 9)

Nº	REF.	DESCRIPTION	Q
1	16.120.00	MIXER	1
2	16.920.00	HOSE	4
3	G.100.06	COUPLING	1
4	16.000.07	COUPLING	1
5	CTF.001	PLUG	1
7	16.700.00	HP FILTER	1
8	G.920.03	SPRING	2
9	16.000.10	TUBE	2

AIR MOTOR "CLEANING PUMP"

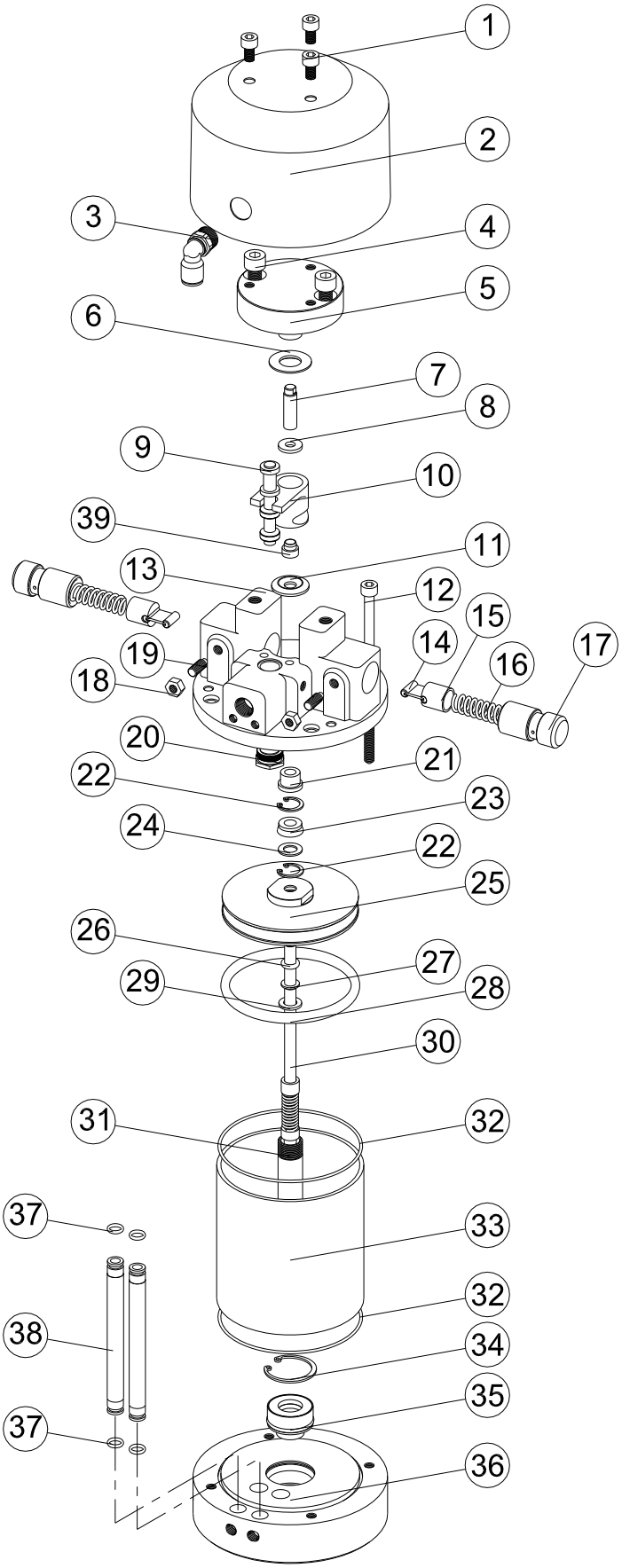

(fig. 10)

Nº	REF.	DESCRIPTION	Q
1	CTB.002	SCREW	3
2	080.100.01	COVER	1
3	CNA.065	ELBOW	1
4	CTB.012	SCREW	2
5	080.120.00	COVER	1
6	080.100.05	SNUBBER	1
7	080.170.05	GUIDE	1
8	080.100.08	WASHER	1
*9	080.150.00	AIR DISPENSER	1
10	080.100.07	HOUSING	1
11	080.100.04	SNUBBER	1
12	CTB.030	SCREW	4
13	080.110.00	MOTOR BODY	1
14	080.140.00	SPRING SUPPORT	2
15	080.100.09	SPRING BUTT END	2
16	080.100.11	SPRING	2
17	080.100.10	SUPPORT	2
18	CTU.002	NUT	2
19	CTG.009	SCREW	2
20	080.130.00	PLUG	1
21	080.100.02	BUSHING	1
22	CAR.112	RETAINER	2
*23	CAB.005	RING	1
24	080.100.03	SEAT	1
25	080.170.01	PISTON	1
26	CJT.022	JOINT	1
27	080.170.02	SEAT	1
*28	CJT.023	JOINT	1
29	080.170.03	WASHER	1
30	080.171.00	ROD	1
31	080.170.04	ROD	1
32	CJT.024	JOINT	2
33	080.100.13	CYLINDER	1
34	CAR.118	RETAINER	1
*35	080.800.00	KEEPING BACK	1
36	080.100.12	MOTOR BASE	1
37	CJT.025	JOINT	4
38	080.100.14	PIPE	2
39	080.100.06	RING	1

*** Included in KIT.055**

DISPLACEMENT PUMP "CLEANING PUMP"

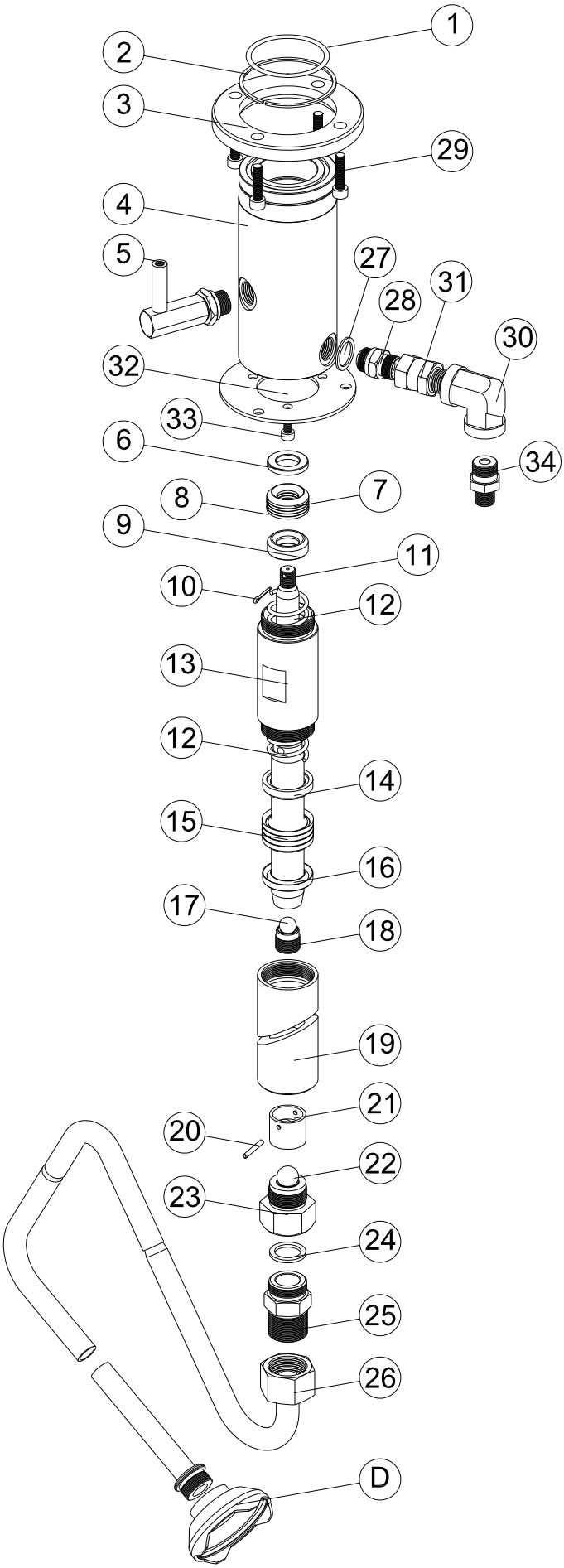

(fig. 11)

Nº	REF.	DESCRIPTION	Q
1	CJT.026	JOINT	1
2	CAR.111	RETAINER	1
3	080.200.03	BRIDLE	1
4	080.200.01	BODY	1
5	080.210.00	OIL TUBE	1
***6**	080.200.04	FEMALE GLAND	1
***7**	B.131.02	PACKING	4
***8**	B.930.04	PACKING	1
***9**	080.200.06	MALE GLAND	1
10	CPA.109	PIN	1
11	080.200.16	ROD	1
12	080.200.07	SPRING	2
13	080.200.08	CYLINDER	1
***14**	080.200.12	MALE GLANG	1
***15**	080.200.13	PACKING	4
***16**	080.200.15	FEMALE GLAND	1
17	CBO.110	BALL	1
18	080.230.00	PISTON VALVE	1
19	080.200.09	HOUSING	1
20	080.200.11	PIN	1
21	080.200.10	BALL GUIDE	1
22	CBO.111	BALL	1
23	080.220.00	INLET VALVE	1
24	080.200.19	JOINT	1
25	080.000.01	COUPLING	1
26	D.100.00	FLUID SUCCION	1
27	CAR.015	WASHER	1
28	080.240.00	ANTIRRETORNO	1
29	CTB.013	SCREW	4
30	CNA.006	ELBOW	1
31	CNA.121	COUPLING	1
32	16.000.01	SUPPORT	1
33	CTB.019	SCREW	3
34	16.000.07	COUPLING	1

*** Included in KIT 024**

NOTE: Fix parts 11 and 18 with loctite 542 or similar (wait 4 hour before start running the unit).

TROUBLESHOOTING GUIDE

PROBLEM	POSSIBLE CAUSE	SOLUTION
Pump. fails to operate.	■ Restricted line or inadequate air supply. ■ Insufficient air pressure, closed or clogged air valves, etc. ■ Exhausted fluid supply. ■ Obstructed fluid hose, gun or dispensing valve. ■ Clogged spray tip or filters.	■ Clear, increase air. ■ Open, clean. ■ Refill; purge all air from pump and fluid lines. ■ Clear. ■ Clear or replace.
Pump operates but output low on down stroke.	■ Clogged filters. ■ Throat packings nut too tight or to loose. ■ Exhausted fluid supply. ■ Obstructed fluid hose or gun. ■ Worn spray tip. ■ Held open or worn intake valve. ■ Held open or worn fluid piston or packings.	■ Clear or replace. ■ Adjust. ■ Refil and prime. ■ Clear. ■ Replace. ■ Clear. ■ Clear or replace.
Erratic or accelerated operating.	■ Exhausted fluid supply. ■ Check valves need adjustment. ■ Held open or worn intake valve. ■ Held open or worn fluid piston or packings.	■ Refill and prime. ■ Adjust. ■ Clear. ■ Clear or replace.

For trouble free operation is absolutely essential that your sprayer be kept clean and free of residual paint buil-up on the internal parts. It must be cleaned and lubricated after each use.

WARRANTY

M.B.P., will any repairs necessary during the first 12 months after purchase of a new unit, with the exceptions shown under 1 and 2 below, and under the conditions shown in item 3.

1.- Damage caused by external abuse, customer negligence, or failure to operate the unit in accordance with the instructions supplied with the unit.

2.- Normal maintenance items.

3.- Within the first 12 months after purchase, M.B.P. will pay 100% of the cost of covered repairs.

In no case will M.B.P.liability extend beyond repair or repalacement of the equipment. Such liability is limited to the amount of the original purchase price paid for the unit, minus a reasonable deduction for the time the unit has been in service. It is the responsibility of the purchaser under this warranty to ship or deliver the failed paint sprayer to the authorized service center at the purchaser's expence. Parts or components covered under this warranty may either be repaired or replaced at M.B.P. option.

Equipent not covered by M.B.P. warranty. Accessories or components of equipment sold by M.B.P. that are nort manufactured by M.B.P. are subject to the warranty, if any, of their manufacturer. M.B.P. will provide purchaser with reasonable assistance in making such claims.

The Industry Department of The Basque Goverment, states that all electric and pneumatic airless equipment manufacture by M.B.P. S.L., follows the ''CE'' standards under the number 83/392/CEE.

DECLARACION DE CONFORMIDAD ''CE''
''EC'' DECLARATION OF CONFORMITY

MODELO / MODEL TEL - 8-2K (5:1)

Este producto cumple con la siguiente directiva de la Comunidad Europea.

This Product complies with the following European Comunity Directive.

Directiva 2014/34/EU Atex sobre máquinas. (Ex II 2G c T6 X)
Machinery Directive 2014/34/EU Atex Directive. (Ex II 2G c T6 X)

APROBADO POR /
APPROVED BY AITOR ORTIZ

FECHA / DATE

MBP, S.L. figura inscrita en el Registro Industrial del País Vasco con el Nº 01/8030 y cumple los requisitos para el desarrollo de su actividad comercial.
MBP, S.L. is registered in the Industrial Register of the Basque Country with the Nº 01/8030.

CE